Dry Miter Cutter 9410ND

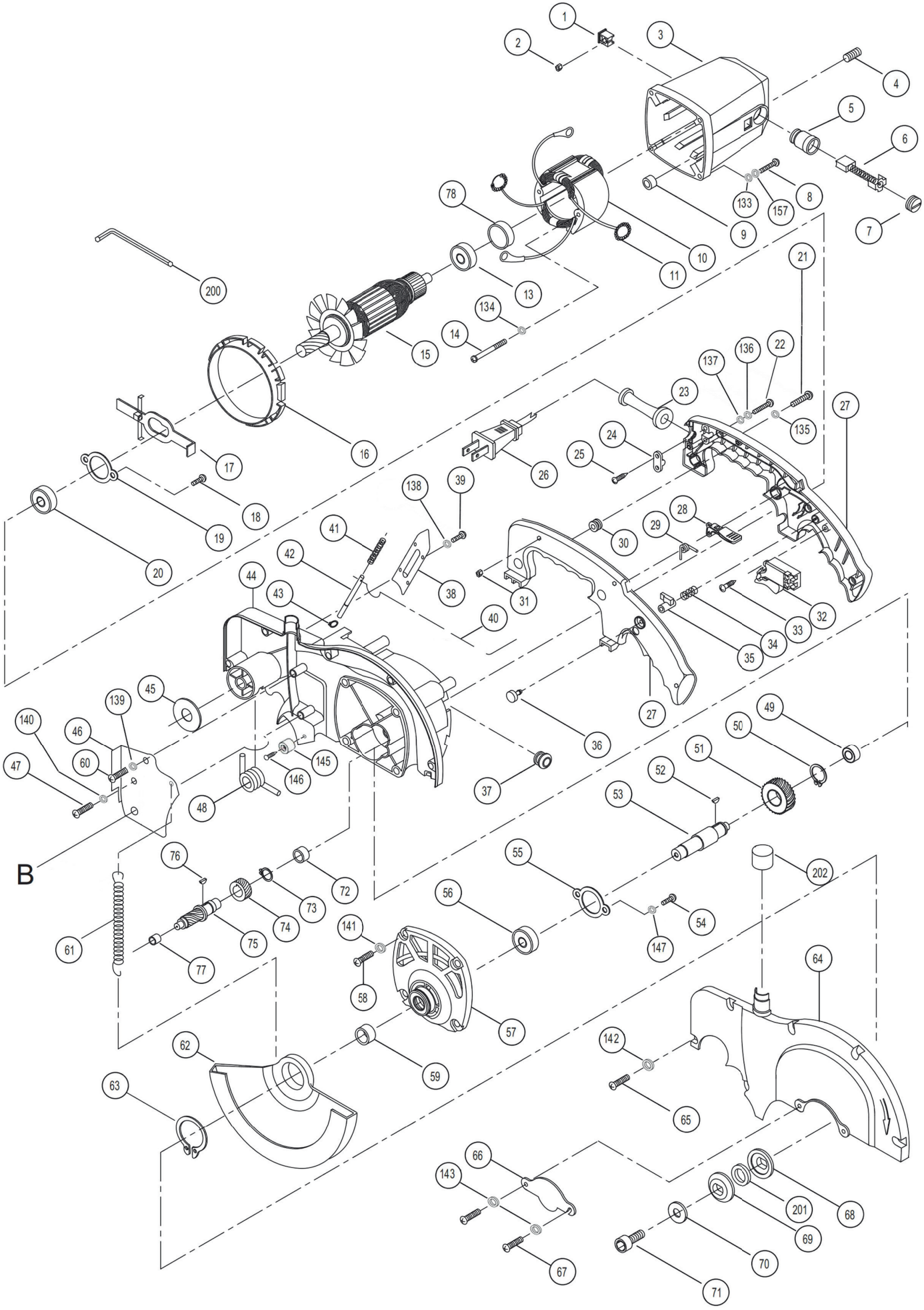

Dry Miter Cutter 9410ND

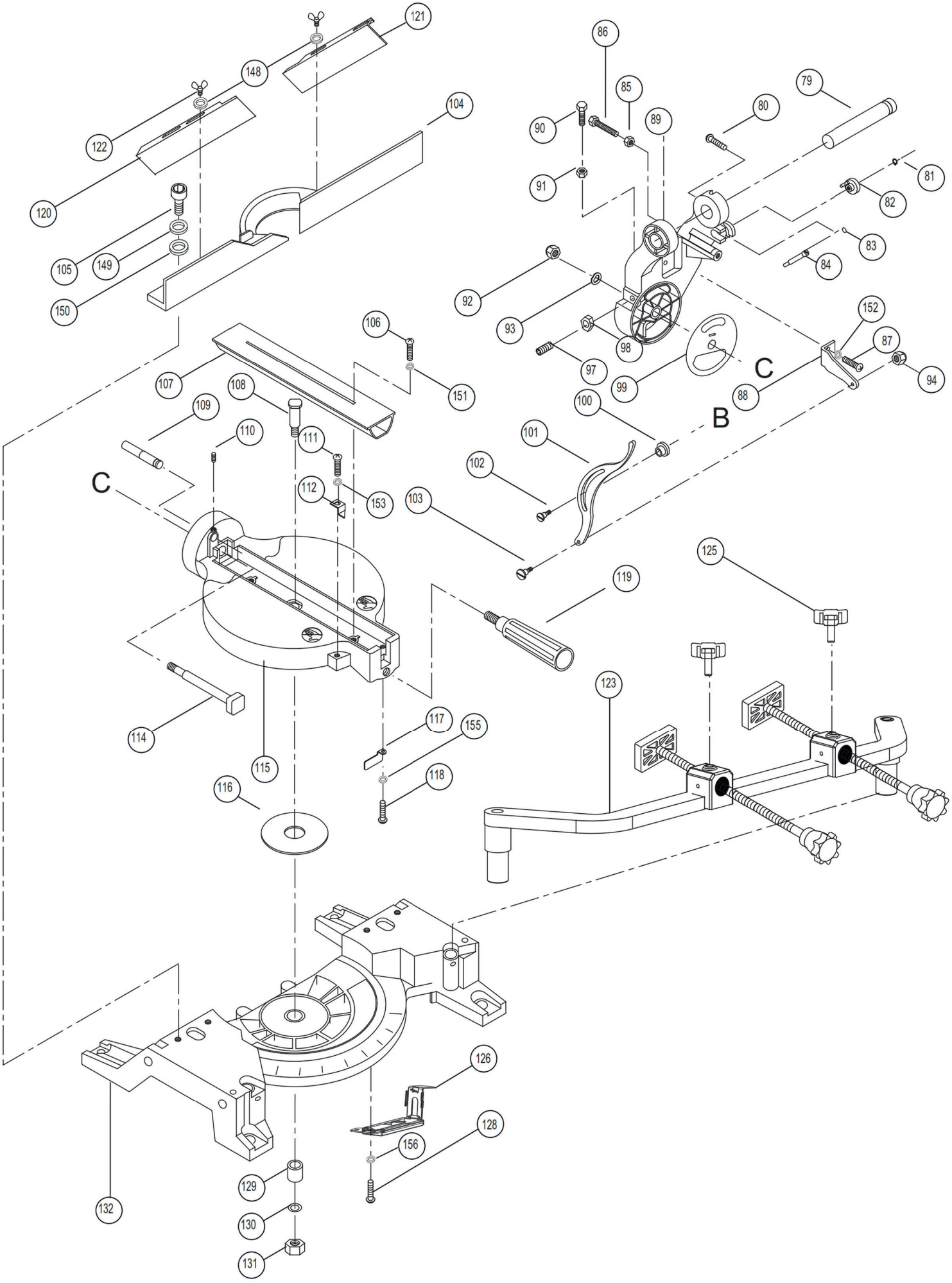

DMC 9410ND | 600651US

JEPSON POWER GERMANY
Leading Through Innovation

ITEM	PART NO	Q'TY	PART NAME		Price in $ excl. VAT
1	1604017	2	Nut Housing		$ 1,23
2	3301005	2	Hex. Nut	M5	$ 1,23
3	1607059N	1	Motor Housing		$ 50,55
4	F2443010	2	Hex. Socket No Hd. Screw	M5×10	$ 1,60
5	0903028	2	Carbon Brush Holder		09030285SET
6	0901008-2	1	Carbon Brush SET (2 Pieces)	(220V)(115V)	$ 43,17
7	0902006	2	Brush Holder Cap		09030285SET
8	F2413027	4	Pan Hd. Screw	M5×27	$ 1,11
9	F2106322	2	Sleeve		$ 2,09
10	F1001092E	1	Field Assembly	(115V)	$ 127,43
	1002092E	1	Field Assembly	(230V)	$ 127,43
11	2210013	2	Brush Holder Spring		$ 2,58
13	0602010	1	Ball Bearing	6200ZZ	$ 28,41
14	F2413070	2	Pan Hd. Screw	M5×70	$ 1,60
15	F1803070	1	Armature Assembly	(115V)	$ 234,81
	F1804070	1	Armature Assembly	(230V)	$ 234,81
16	F1201018	1	Fan Guide		$ 5,29
17	F1209448	1	Spindle Locker		$ 5,90
18	2422010	2	Counter Sunk Hd. Screw	M4×10	$ 0,86
19	F1202017	1	Bearing Retainer		$ 2,83
20	0602007	1	Ball Bearing	6002ZZ	$ 16,36
21	2413020	2	Pan Hd. Screw	M5×20	$ 1,35
22	2412023	4	Pan Hd. Screw	M4×23	$ 0,86
23	1604242	1	Cord Guard	(230V)	$ 4,67
24	1604018	1	Strain Relief		$ 1,72
25	2492014	2	Tapping Screw	TS4×14	$ 0,86
26	1114012	1	Power Supply Cord With US Plug	(115V)	$ 34,56
	F1104002	1	Power Supply Cord With VDE Plug	(230V)	$ 34,56
27	1601036-1S	1	Handle Set	(230V)	$ 30,14
28	1604273	1	Set Lever	(230V)	$ 1,85
29	2207101	1	Spring	(230V)	$ 0,62
30	2106466	2	Wire Guide Wheel	(230V)	$ 3,08
31	3301004	4	Hex. Nut	M4	$ 1,23
32	0704105	1	Switch	(230V)	0704105SET
33	2492010	2	Tapping Screw	TS4×10	0704105SET
34	F2207017	1	Spring		0704105SET
35	1604309	1	Push Pole		0704105SET
36	1604310	1	Stopper		0704105SET
37	1606023	1	Wire Guide		$ 2,58
38	1209509	1	Plate		$ 2,34
39	2412008	4	Pan Hd. Screw	M4×8	$ 0,49
40	2106470	1	Wire	(230V)	2106495SET
41	2207107	1	Stopper Spring	(230V)	2106495SET
42	2106495	1	Stopper	(230V)	2106495SET
43	2203070	1	Retaining Ring	C-7(230V)	2106495SET
44	3005154-1	1	Blade Cover		$ 143,79
45	1209510	2	Washer		$ 4,31
46	1209508	1	Plate		$ 14,27
47	2412008	1	⊕Pan Hd. Screw	M4×8	$ 0,49
48	2207106	1	Torsion Spring		$ 0,49
49	0607014	1	Needle Bearing	HK-0910	$ 10,46
50	2203120	1	Retaining Ring	C-12	$ 2,83
51	1905111	1	Helical Gear	Ø13×4	$ 28,41
52	T2201003	1	Woodruff Key	Ø10×3	$ 3,69
53	2004104	1	Spindle	ϕ22x96.5	$ 28,41
54	2412010	2	Tapping Screw	M4×10	$ 1,23
55	1202027	1	Bearing Retainer		$ 3,20
56	0606063	1	Ball Bearing	6203LU	$ 28,41
57	3004085	1	Bearing Box		$ 58,18
58	2413020	4	⊕Pan Hd. Screw	M5×20	$ 1,35
59	2108040	1	Sleeve	ϕ22*ϕ17*17	$ 5,04
60	2412008	1	Screw	M4×8	$ 0,49
61	2207160	1	Spring	ϕ4.5*63*ϕ0.6	$ 2,71
62	3005156	1	Safely Cover		$ 42,56
63	2203420	1	Retaining Ring	C-42	$ 2,95
64	3005155-1	1	Face Cover		$ 39,73
65	2413015	5	⊕Pan Hd. Screw	M5×15	$ 1,35
66	1209530	1	Plate		1209530SET

DMC 9410ND | 600651US

JEPSON POWER GERMANY
Leading Through Innovation

67	2413008	2	⊕Pan Hd. Screw	M5×8		1209530SET
68-71/2	2108031SET	1	2 x Flange, 1 x Flat Washer, 1 x Screw, 1x Sleeve		$	48,46
72	0607016	1	Ball Bearing	HK-0709	$	9,23
73	2203170	1	Retaining Ring	C-17	$	0,74
75	1906028	1	Gear Shaft		$	12,55
74	F1905112	1	Pinion Gear		$	10,58
76	F2201006	1	Woodruff Key	4xϕ13	$	2,09
77	F0607005	1	Needle Bearing	HK-1210	$	17,22
78	1606101	1	Rubber Cup	ϕ30xϕ30x10	$	5,41
79	2106494	1	Swing Shaft	ϕ16x122	$	10,21
80	2412012	1	Pan Hd. Screw	M4×12	$	1,23
81	2203070	1	Retaining Ring	C-7		2106553SET
82	1604300-1	1	Knob			2106553SET
83	1606168	1	O – Ring	ϕ6.8xϕ10.6xϕ1.9		2106553SET
84	2106553	1	Transportation Lock Pin	ϕ9.9x44		2106553SET
85	3301008	1	Hex. Nut	M8	$	1,23
86	2476035	1	Hex. Hd. Screw	M8×35	$	1,35
87	2413015	2	Pan Hd. Screw	M5×15	$	1,35
88	1209531N	1	Support Seat		$	8,12
89	3005160-2	1	Arm		$	82,90
90	2476030	1	Hex. Hd. Screw	M8×30	$	1,23
91	3301008	1	Hex. Nut	M8	$	1,23
92	3306012	1	Hex Nut With Plastic Insert	M12	$	1,23
93	2106668	1	Flat Washer	ϕ12xϕ32x6	$	7,26
94	3306005	1	Lock Nut	M5	$	0,62
97	2446020	2	Hex. Socket No Hd. Screw	M8×20	$	1,23
98	3301008	1	Hex. Nut	M8	$	1,23
99	1209520	1	Flat Washer		$	2,58
100	2106487	1	Pilot Wheel	ϕ6.7xϕ9xϕ15x7.4		1209529SET
101	1209529	1	Pilot Plate			1209529SET
102	2106675	1	Screw			1209529SET
103	2106674	1	Screw			1209529SET
104	3005219	1	Fence Guide		$	75,52
105	2456025-1	4	Hex. Socket Hd. Screw	M8×25	$	1,35
106	2413008	2	Pan Hd. Screw	M5×8	$	1,23
107	3005220	1	Table Insert		$	74,29
108	2106478	1	Shaft		$	28,41
109	2106480-1	1	Locating Pin		$	10,46
110	2442006	1	Hex. Socket No Hd. Screw	M4×6	$	0,86
111	2412010	1	Pan Hd. Screw	M4×10	$	1,23
112	1209496	1	Indicate Plate		$	1,72
114	2106479-2	1	Linking Shaft		$	37,02
115	3005161-1	1	Disc		$	82,90
116	1209494	1	Washer		$	2,83
117	1209489	1	Back-up Plate		$	1,48
118	2412010	1	Pan Hd. Screw	M4×10	$	1,23
119	F1602006	1	Side Handle		$	9,96
120	F3005143	1	Adjusting Plate (L)			F3005143SET
121	F3005142	1	Adjusting Plate (R)			F3005142SET
122	2403012-1	2	Thumb Screw	M5×12		F3005142SET & F3005143SET
123	1501201A	1	Vise Assembly			1501201ASET
125	1604264	2	Wing Nut	M6×15		1501201ASET
126	1501200	1	Detent Plate		$	78,23
128	2413015	2	⊕Pan Hd. Screw	M5×15	$	1,35
129	2106492	1	Bushing		$	5,78
130	1209543	1	Flat Washer	Ø32×12	$	3,81
131	3306012	1	Hex Nut With Plastic Insert	M12	$	1,23
132	3005148-1	1	Base		$	260,39
133	2223050	4	Flat Washer	Ø 5	$	0,37
134	2222050	2	Spring Washer	Ø 5	$	1,11
135	2222050	2	Spring Washer	Ø 5	$	1,11
136	2222040	4	Spring Washer	Ø 4	$	0,37
137	2223040	4	Flat Washer	Ø 4	$	0,37
138	2222040	4	Spring Washer	Ø 4	$	0,37
139	2222050	1	Spring Washer	Ø 5	$	1,11
140	2222040	1	Spring Washer	Ø 4	$	0,37
141	2222050	4	Spring Washer	Ø 5	$	1,11
142	2222050	5	Spring Washer	Ø 5	$	1,11
143	2222050	2	Spring Washer	Ø 5		1209530SET

145	1606227	1	Rubber Stopper		$	1,48
146	2212035	1	Rivet		$	0,74
147	2222040	2	Spring Washer	Ø 4	$	0,37
148	1209352	2	Flat Washer			F3005142SET & F3005143SET
149	2222080	4	Spring Washer	Ø 8	$	1,23
150	2223080	4	Flat Washer	Ø 8	$	1,60
151	2222050	2	Spring Washer	Ø 5	$	1,11
152	2222050	2	Spring Washer	Ø 5	$	1,11
153	2222040	1	Spring Washer	Ø 4	$	0,37
155	2222040	1	Spring Washer	Ø 4	$	0,37
156	2222050	2	Spring Washer	Ø 5	$	1,11
157	2222050	4	Spring Washer	Ø 5	$	1,11
200	F2603060	1	Hex Wrench	6mm	$	5,04
201	F2108031	1	Sleeve	ϕ25.4xϕ15.9x2	$	3,08
202	1604392	1	Blade Cover End Cap	Yellow	$	7,01
SETS						
203	0903028SET		2x Carbon Brush Holder (5) / 2x Brush Holder Cap (7)		$	63,84
204	0704105SET		Switch (32) / 2x Tapping Screw (33) / Spring (34) / Push Pole (35) / Stopper (36)		$	41,94
205	2106495SET		Wire (40) / Stopper Spring (41) / Stopper (42) / Retaining Ring (43)		$	6,89
206	1209530SET		Plate (66) / 2x ⊕Pan Hd. Screw (67) / 2x Spring Washer (143)		$	7,13
207	2106553SET		Retaining Ring (81) / Knob (82) / O – Ring (83) / Transportation Lock Pin (84)		$	23,62
208	1209529SET		Pilot Wheel (100) / Pilot Plate (101) / Screw (102) / Screw (103)		$	23,37
209	F3005143SET		Adjusting Plate (L) (120) / Thumb Screw (122) / Flat Washer (148)		$	31,98
210	F3005142SET		Adjusting Plate (R) (121) / Thumb Screw (122) / Flat Washer (148)		$	31,98
211	1501201ASET		Vise Assembly (123) / 2x Wing Nut (125)		$	262,73